Finding Attributes Answer

- A person who might receive a letter
  - first name, last name, address, etc.
- A person suspected in a criminal case
  - photograph, fingerprint, measurements, alibi, etc.
- The person the phone bill is sent to
  - first name, last name, address, dialing number, connection rate, communication cost
- An employee using a security access card
  - “his” access card number

Association Solutiom

- The printer Neo, of type Phaser 4400N, made by Xerox, located in room McConnell 322...
- Mr. Rich, business man, 42 years old, living in Zug, Switzerland, married with Mrs. Dufour, ...
- Mr. Rich owns an account with the Swiss Union Bank.
- A flight corresponds to an aircraft flying a route on some weekday.

Works For Answer

- Develop a Domain Model, including multiplicities, for a system where a person works for exactly one company

Employee Answer (1)

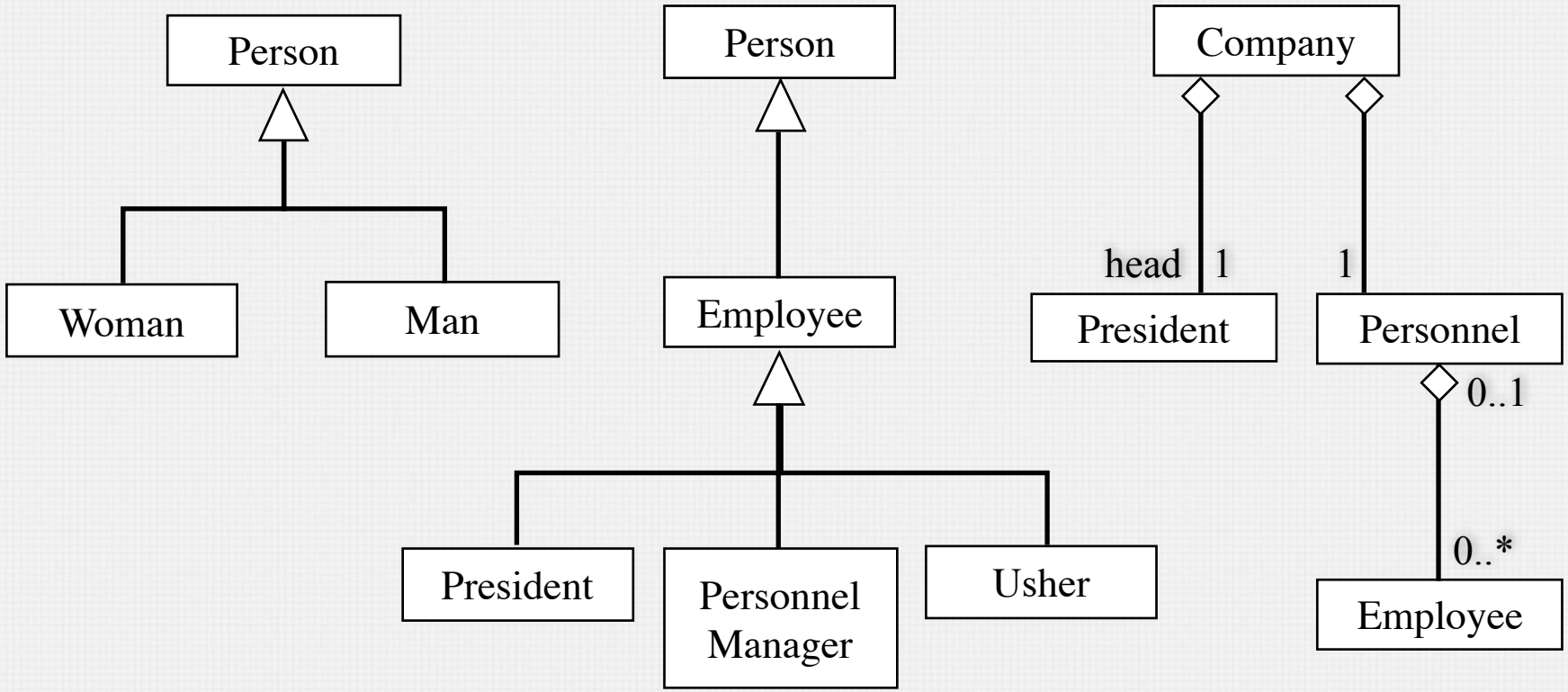

Employee Answer (2)

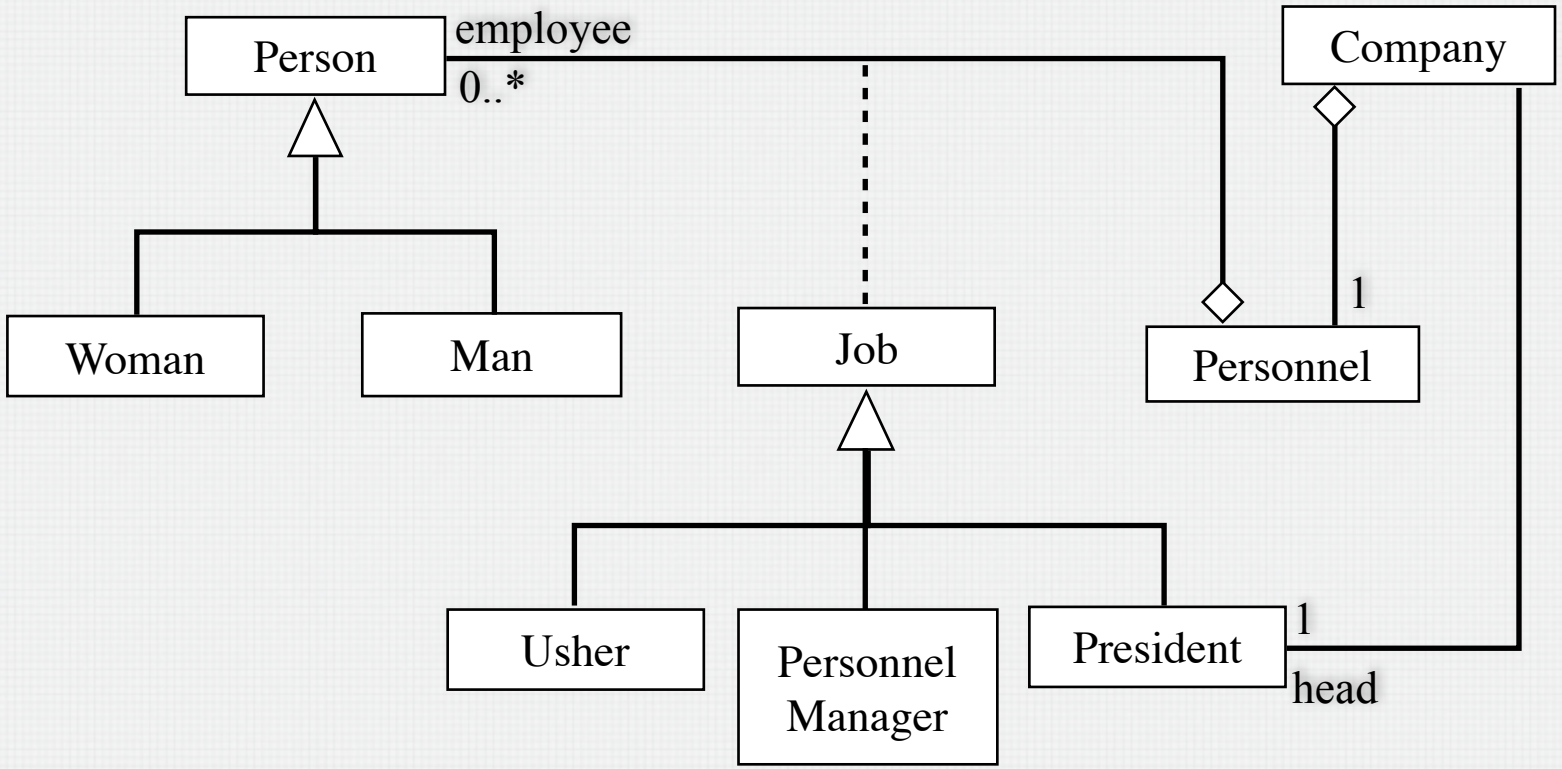

Relationships Answer

- A country has a capital.
  - composition, aggregation or association
- A file is a regular file or a directory.
  - generalization-specialization
- A file belongs to a directory.
  - aggregation (Unix), composition (Windows)
- Files contain records.
  - composition
- A polygon is composed of segments.
  - aggregation
- A person uses a programming language.
  - association

Graph Answer

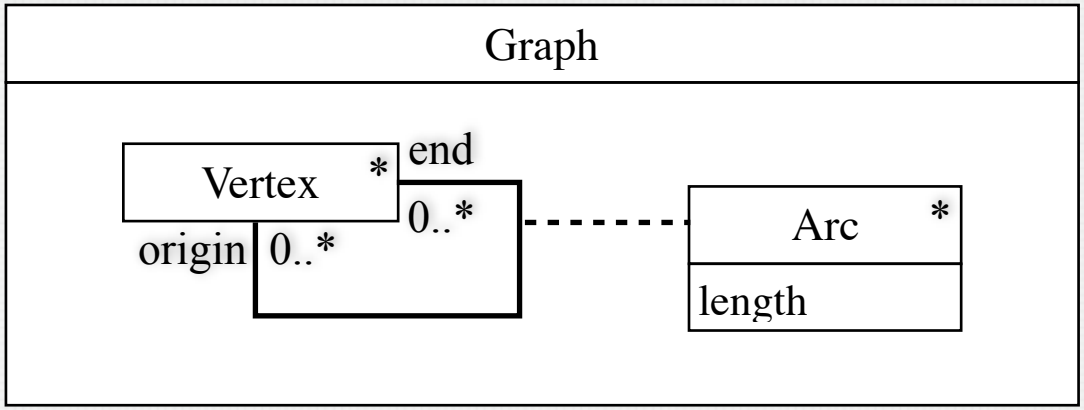

Multigraph Answer

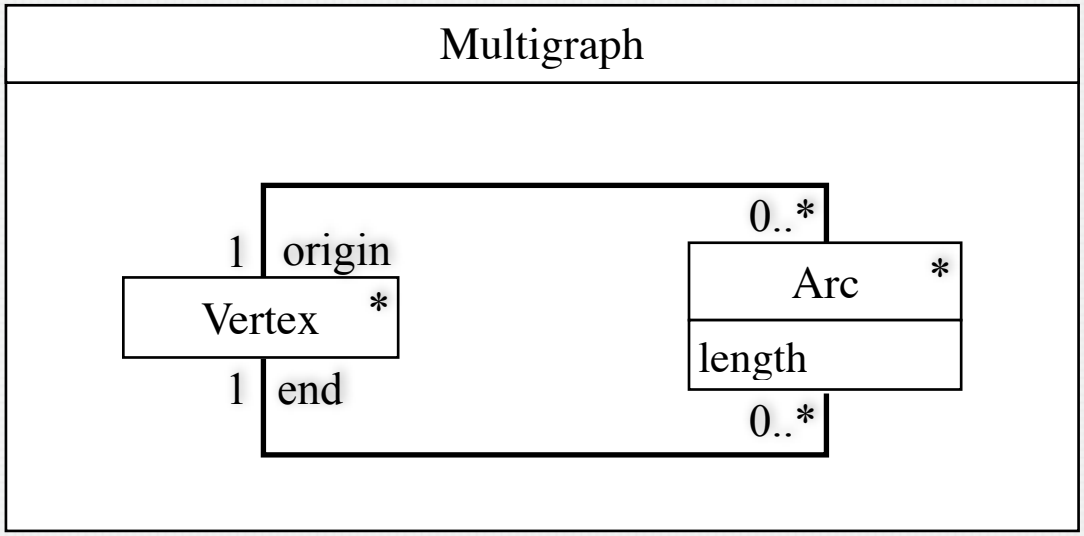

Automobiles Answer

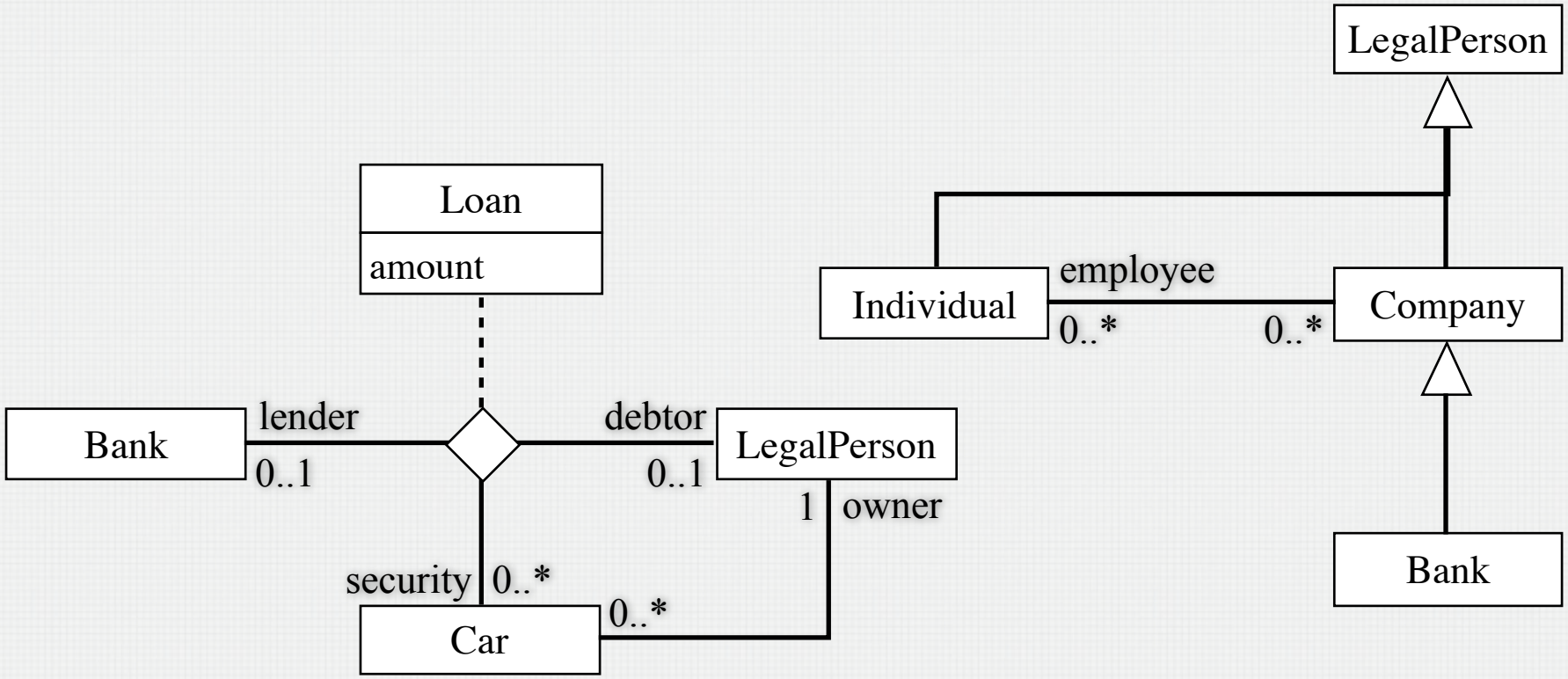

Context: Loan
self.security.owner = self.debtor
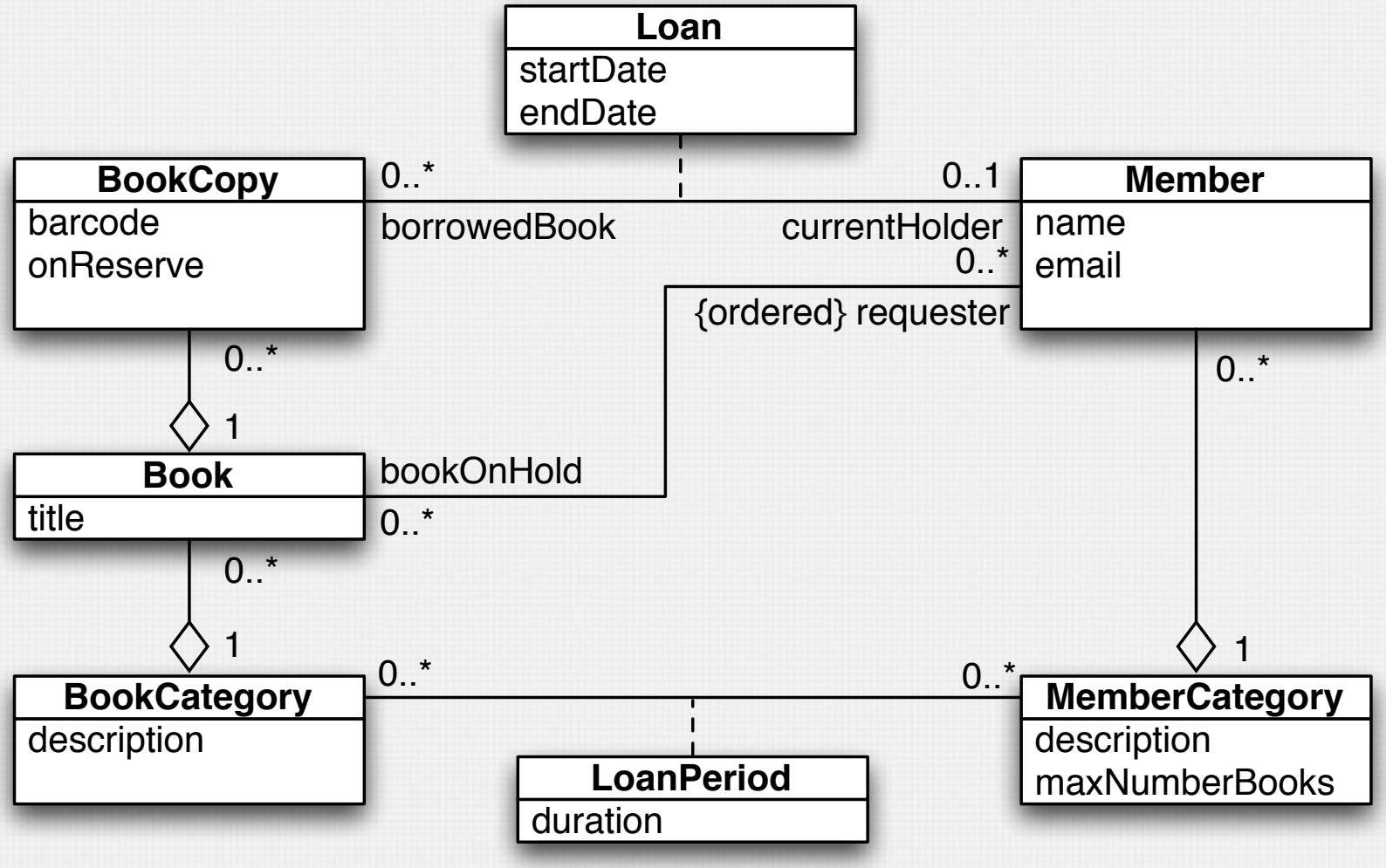
Library Answer